SNAPPY
KNOW HOW. NO LIMITS.

SNP30-VF-3

Reliable Technical Data

- Rated Input Voltage:200-240VAC
- Input Frequency:50/60Hz
- Output Power:30W
- Body: PC
- Open Circuit; Short Circuit; Over Load;
- Over Heat Protection

- Safety According to EN61347-1，EN61347-2-13
- EMI According to EN55015
- EMS According to EN61000-3-2; EN61000-3-3; EN61547
- EMF According to EN62493-2010
- ERP According to EN1194-2012

Dimension in mm

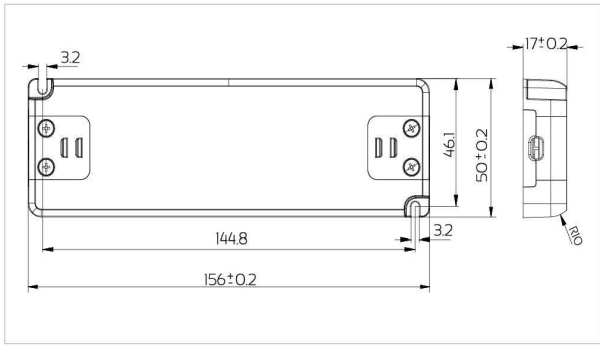

Characteristics

Rated input voltage: AC200-240V 50/60Hz (power factor measured at AC230V and full load)

Model No.	Constant output voltage	Load	Max output current	PF	Ta	Tc	L x W x H
SNP30-12VF-3	12V	0-30W	2.5A	⩾0.9	45°C	85°C	156x50x17
SNP30-24VF-3	24V	0-30W	1.25A	⩾0.9	45°C	85°C	156x50x17

SELV

TÜV ☑ EMC ☑ c UL us ☐ c UL us ☐ CE ☑ CB ☐ ☐ N136 ☐ SAA ☐ ☐